PRECISION ANGULAR CONTACT BALL BEARINGS

TYPE 7004CTA/HQ1P4S HCB7004 C T P4S UL

PRECISION P4S

CERAMIC BALL

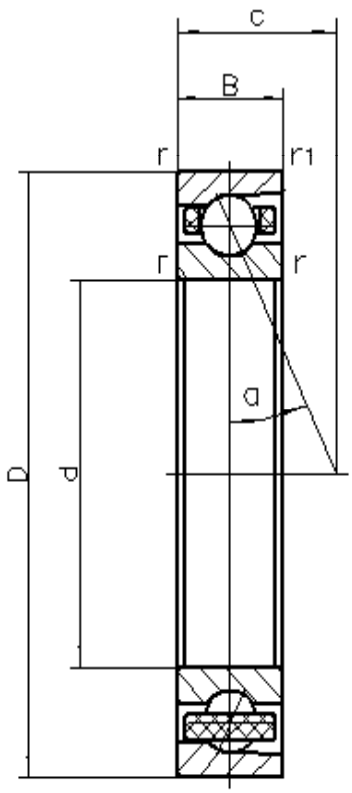

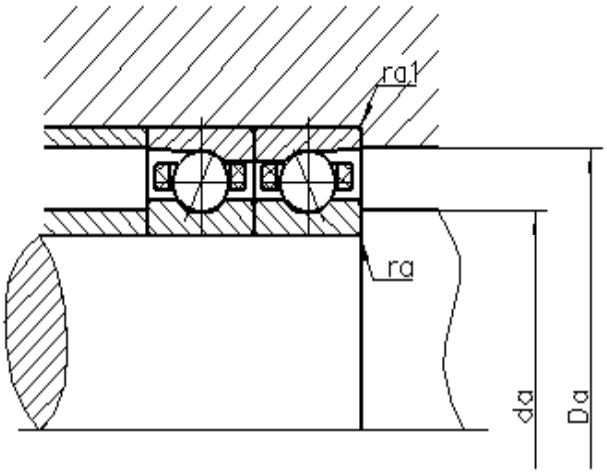

d	20	mm	
D	42	mm	
B	12	mm	
c	10.2	mm	
Da	37	mm	Tolerance: H12
da	25	mm	Tolerance: h12
r min	0.6	mm	
r1 min	0.3	mm	
ra max	0.6	mm	
ra1 max	0.3	mm	
α	15°		Contact angle
m	0.061	kg	Mass
Cr	11100	N	Basic dynamic load rating, radial
Cor	4580	N	Basic static load rating, radial
Fv L	49	N	Preload force
Fv M	120	N	Preload force
Fv H	250	N	Preload force
Ca L	28.3	N/um	Axial rigidity
Ca M	41.6	N/um	Axial rigidity
Ca H	58.4	N/um	Axial rigidity
Limiting speeds	80000	r/min	Lubrication: oil
	53000	r/min	Lubrication: grease