PRECISION ANGULAR CONTACT BALL BEARINGS

TYPE 7005ACTA/HQ1P4S HCB7005 E T P4S UL

PRECISION P4S

CERAMIC BALL

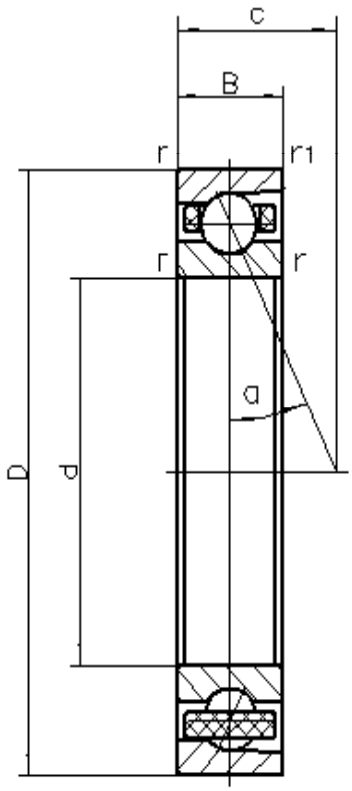

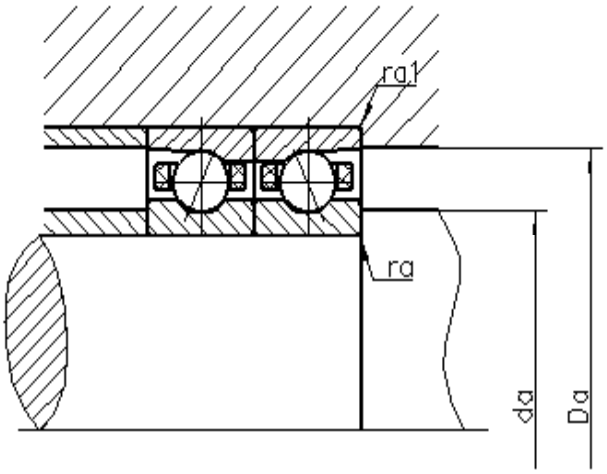

d	25	mm	
D	47	mm	
B	12	mm	
c	14.4	mm	
Da	42	mm	Tolerance: H12
da	30	mm	Tolerance: h12
r min	0.6	mm	
r1 min	0.3	mm	
ra max	0.6	mm	
ra1 max	0.3	mm	
α	25°		Contact angle
m	0.065	kg	Mass
Cr	11700	N	Basic dynamic load rating, radial
Cor	5340	N	Basic static load rating, radial
Fv L	100	N	Preload force
Fv M	200	N	Preload force
Fv H	390	N	Preload force
Ca L	84.4	N/um	Axial rigidity
Ca M	109.1	N/um	Axial rigidity
Ca H	141	N/um	Axial rigidity
Limiting speeds	63000	r/min	Lubrication: oil
	40000	r/min	Lubrication: grease