PRECISION ANGULAR CONTACT BALL BEARINGS

TYPE 7008ACTA/HQ1P4S HCB7008 E T P4S UL

PRECISION P4S

CERAMIC BALL

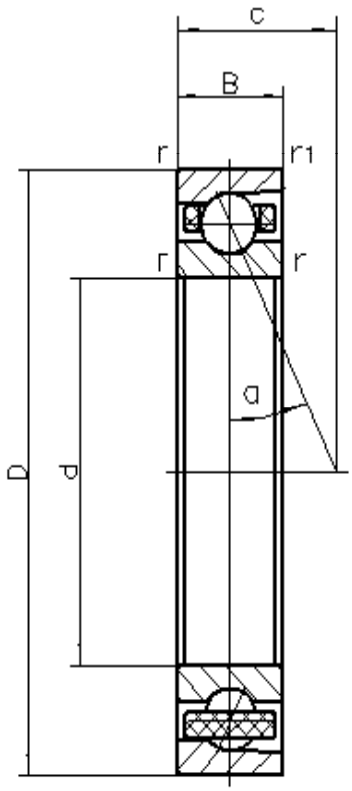

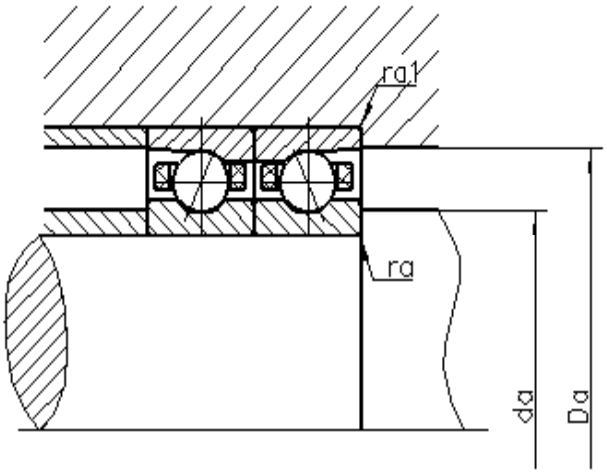

d	40	mm	
D	68	mm	
B	15	mm	
c	20.1	mm	
Da	62	mm	Tolerance: H12
da	46	mm	Tolerance: h12
r min	1	mm	
r1 min	0.6	mm	
ra max	1	mm	
ra1 max	0.3	mm	
α	25°		Contact angle
m	0.168	kg	Mass
Cr	19500	N	Basic dynamic load rating, radial
Cor	10580	N	Basic static load rating, radial
Fv L	200	N	Preload force
Fv M	440	N	Preload force
Fv H	880	N	Preload force
Ca L	131	N/um	Axial rigidity
Ca M	175.3	N/um	Axial rigidity
Ca H	229.2	N/um	Axial rigidity
Limiting speeds	43000	r/min	Lubrication: oil
	28000	r/min	Lubrication: grease