PRECISION ANGULAR CONTACT BALL BEARINGS

TYPE 7011ACTA/HQ1P4S HCB7011 E T P4S UL

PRECISION P4S

CERAMIC BALL

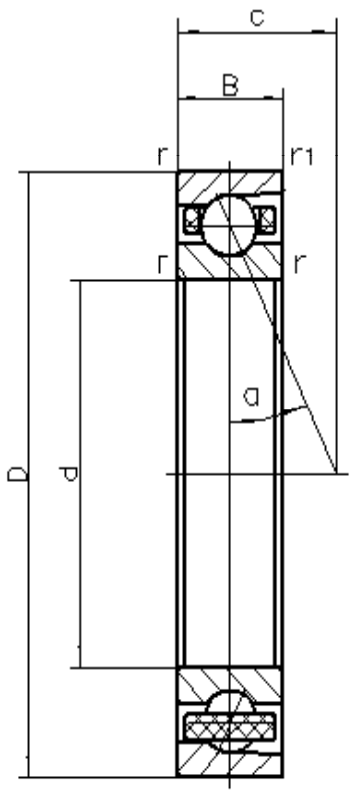

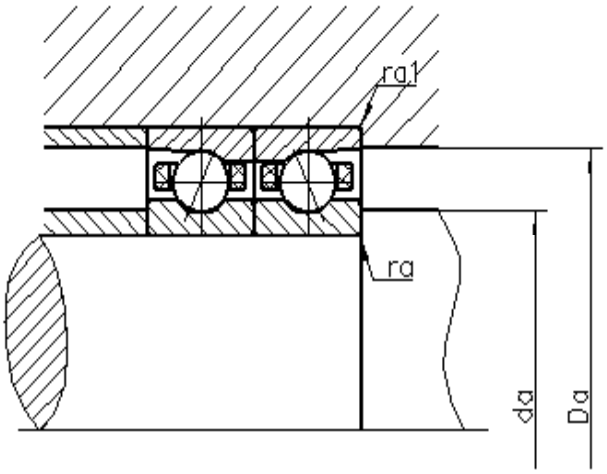

d	55	mm	
D	90	mm	
B	18	mm	
c	25.9	mm	
Da	83	mm	Tolerance: H12
da	62	mm	Tolerance: h12
r min	1.1	mm	
r1 min	0.6	mm	
ra max	1	mm	
ra1 max	0.6	mm	
α	25°		Contact angle
m	0.312	kg	Mass
Cr	32350	N	Basic dynamic load rating, radial
Cor	19060	N	Basic static load rating, radial
Fv L	340	N	Preload force
Fv M	780	N	Preload force
Fv H	1570	N	Preload force
Ca L	177.1	N/um	Axial rigidity
Ca M	240.4	N/um	Axial rigidity
Ca H	315.2	N/um	Axial rigidity
Limiting speeds	30000	r/min	Lubrication: oil
	20000	r/min	Lubrication: grease