PRECISION ANGULAR CONTACT BALL BEARINGS

TYPE 7209AC-2RZTA/P4S B7209 E 2RSD T P4S UL

PRECISION P4S

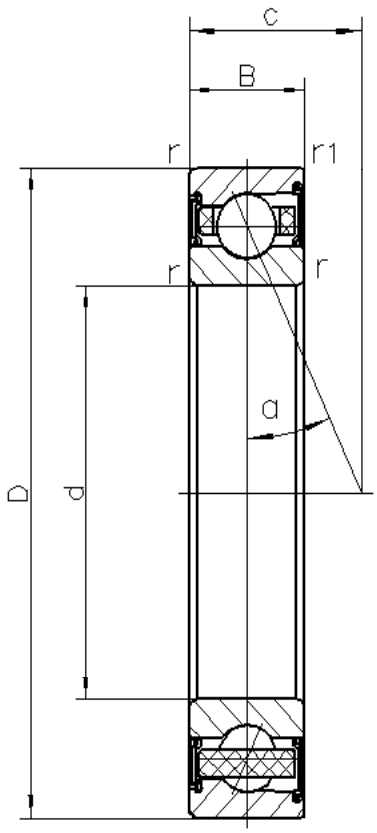

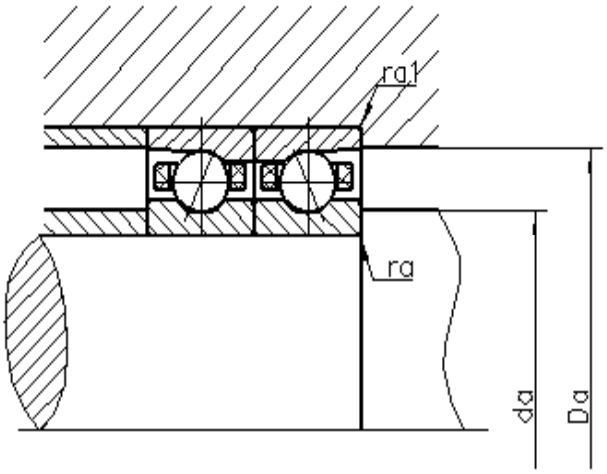

d	45	mm	
D	85	mm	
B	19	mm	
c	24.9	mm	
Da	78	mm	Tolerance: H12
da	52	mm	Tolerance: h12
r min	1.1	mm	
r1 min	0.6	mm	
ra max	1	mm	
ra1 max	0.6	mm	
α	25°		Contact angle
m	0.423	kg	Mass
Cr	36330	N	Basic dynamic load rating, radial
Cor	26670	N	Basic static load rating, radial
Fv L	340	N	Preload force
Fv M	880	N	Preload force
Fv H	1770	N	Preload force
Ca L	140	N/um	Axial rigidity
Ca M	199.6	N/um	Axial rigidity
Ca H	263	N/um	Axial rigidity
Limiting speeds	15000	r/min	Lubrication: grease