PRECISION ANGULAR CONTACT BALL BEARINGS

TYPE 71807CTA/P4S B71807 C T P4S UL
PRECISION P4S

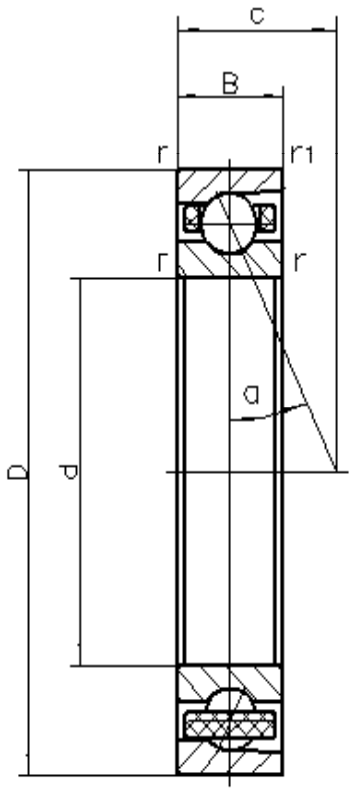

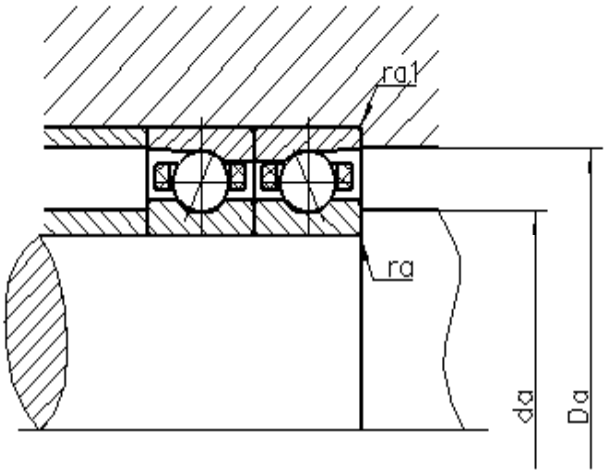

d	35	mm	
D	47	mm	
B	7	mm	
c	9	mm	
Da	44	mm	Tolerance: H12
da	38	mm	Tolerance: h12
r min	0.3	mm	
r1 min	0.1	mm	
ra max	0.3	mm	
ra1 max	0.1	mm	
α	15°		Contact angle
m	0.03	kg	Mass
Cr	4630	N	Basic dynamic load rating, radial
Cor	4100	N	Basic static load rating, radial
Fv L	17	N	Preload force
Fv M	58	N	Preload force
Fv H	135	N	Preload force
Ca L	22.1	N/um	Axial rigidity
Ca M	38.9	N/um	Axial rigidity
Ca H	57.8	N/um	Axial rigidity
Limiting speeds	40000	r/min	Lubrication: oil
	26000	r/min	Lubrication: grease